Writing
Desk
Woodworking for
Mere Mortals

Writing Desk

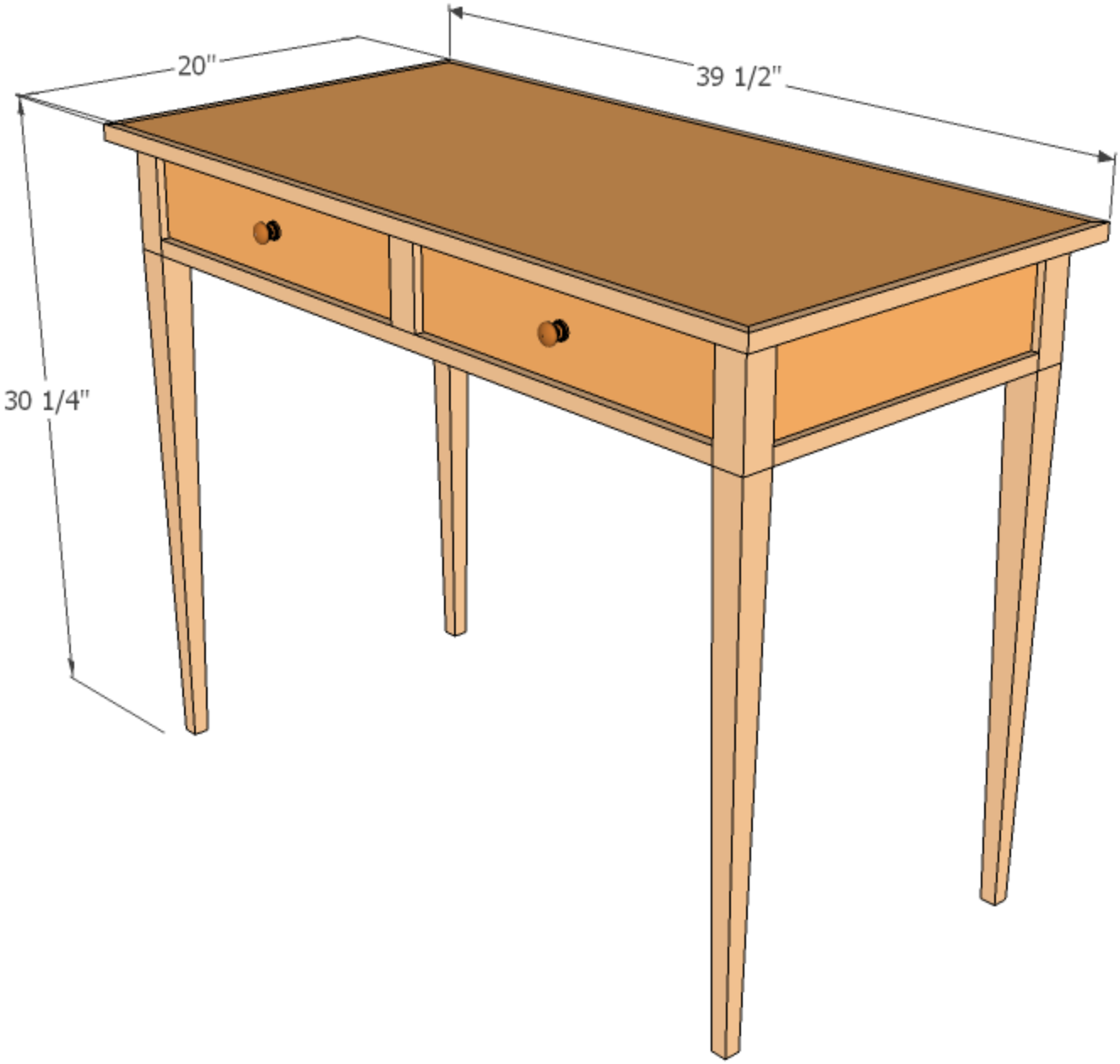

Writing Desk

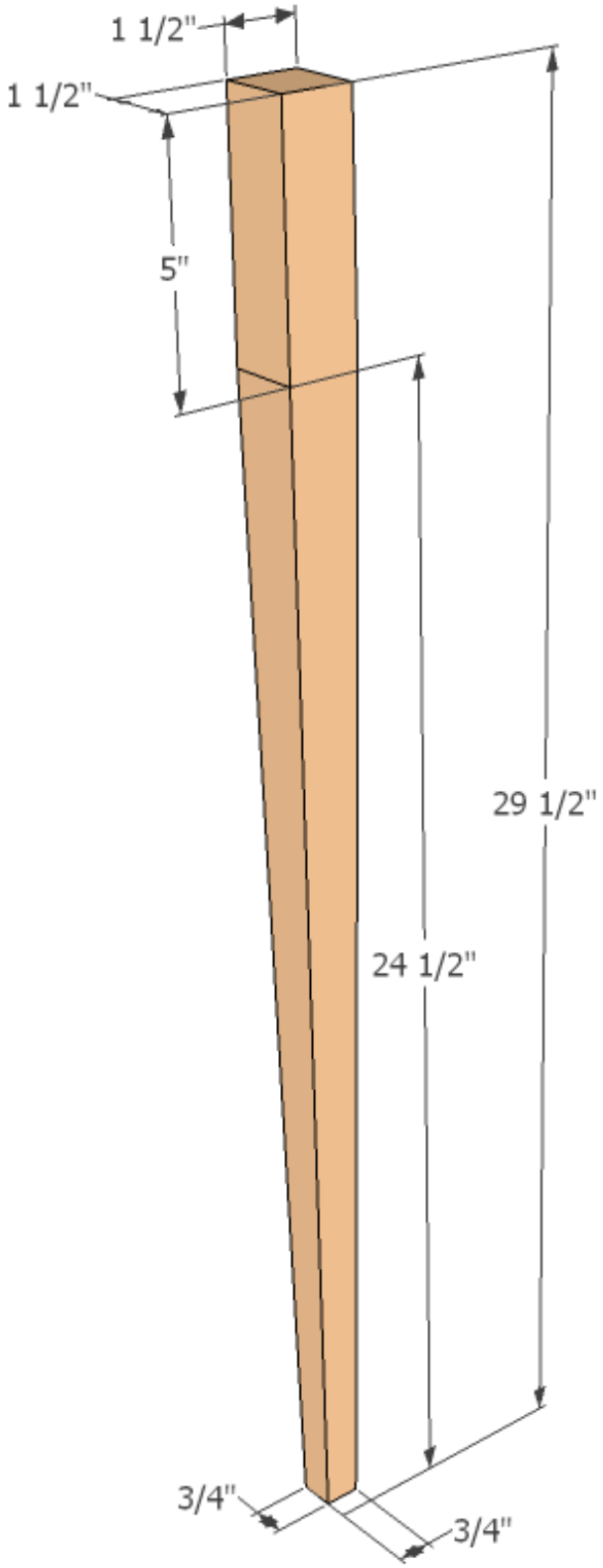

Writing Desk

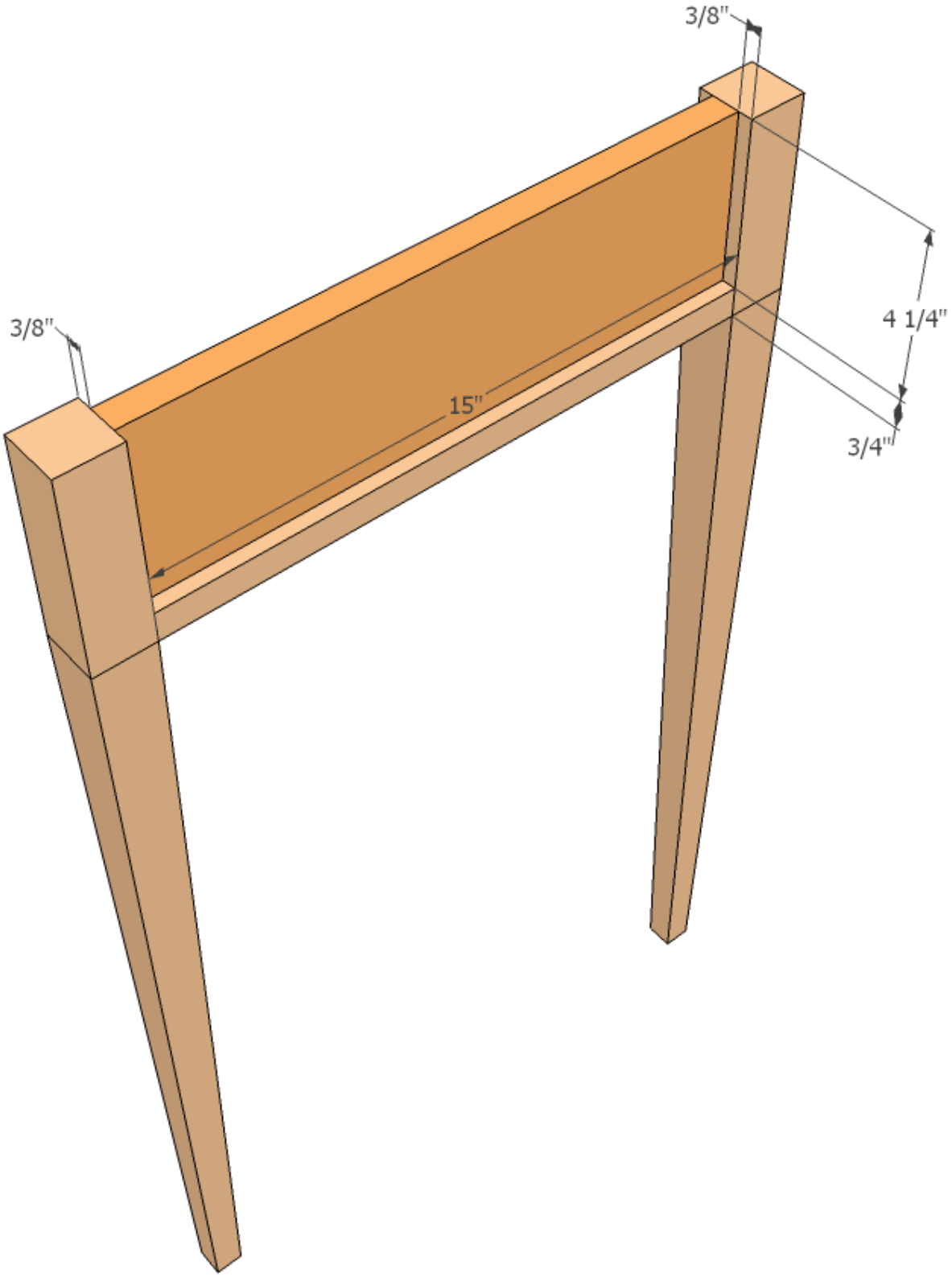

Writing Desk

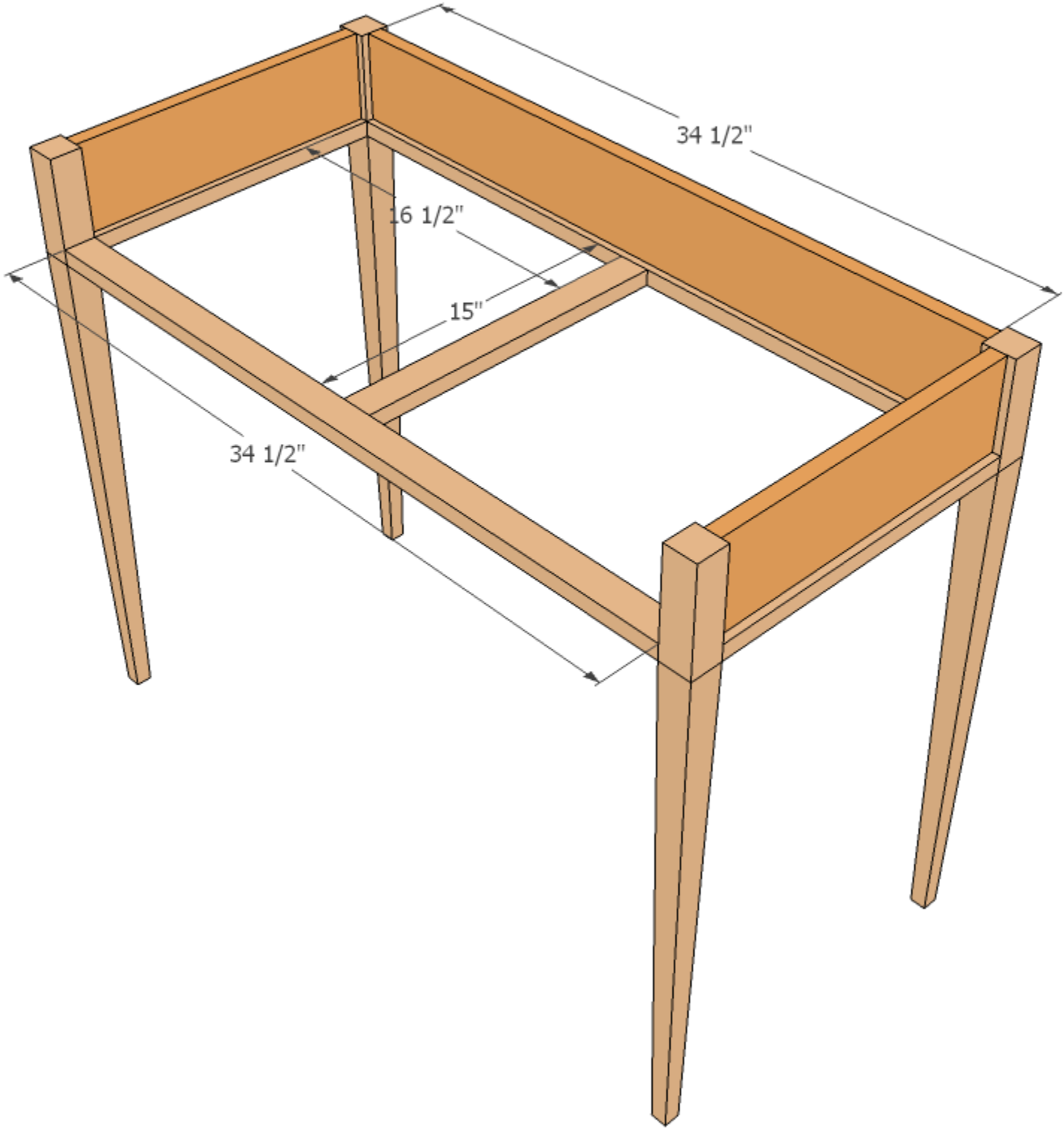

Writing Desk

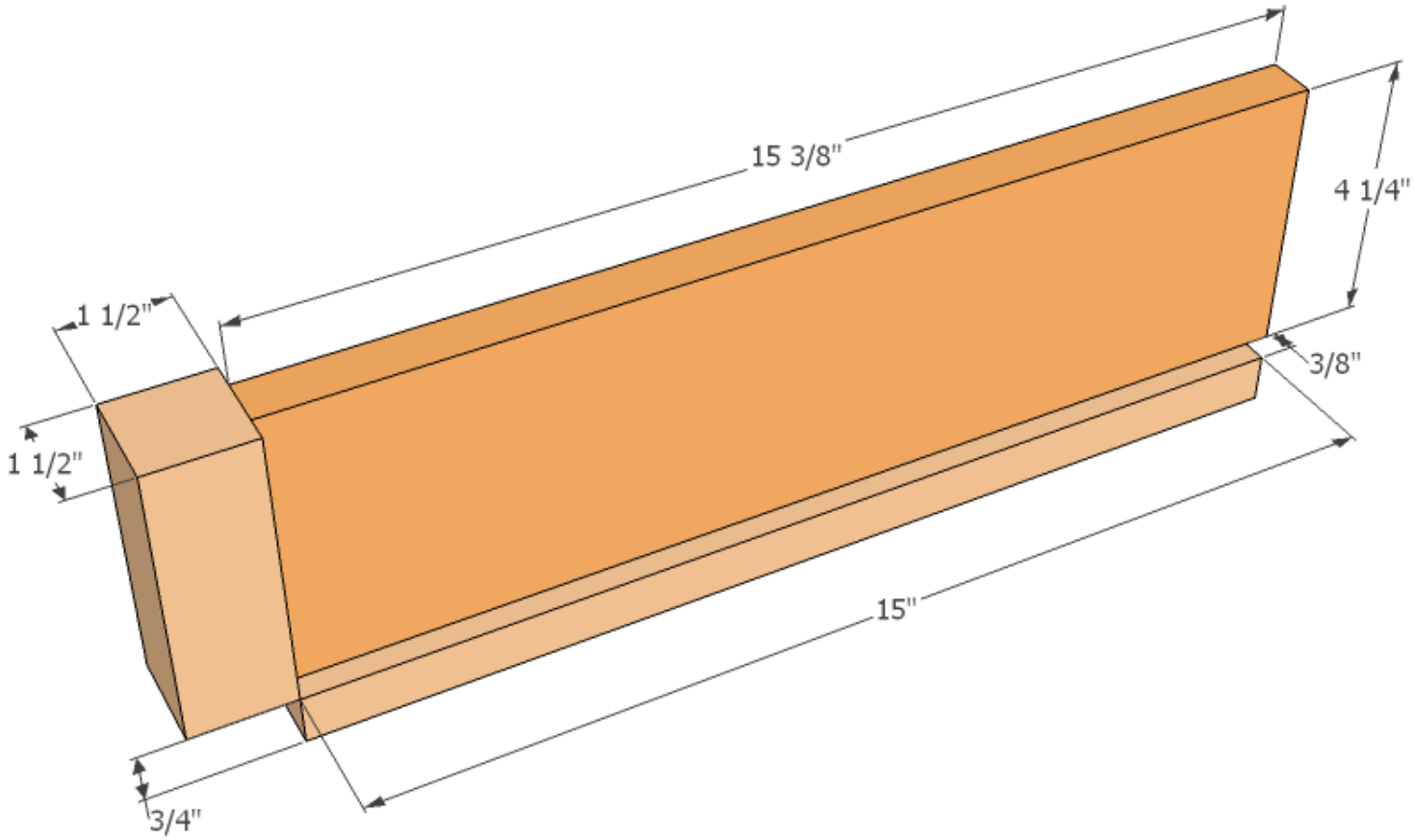

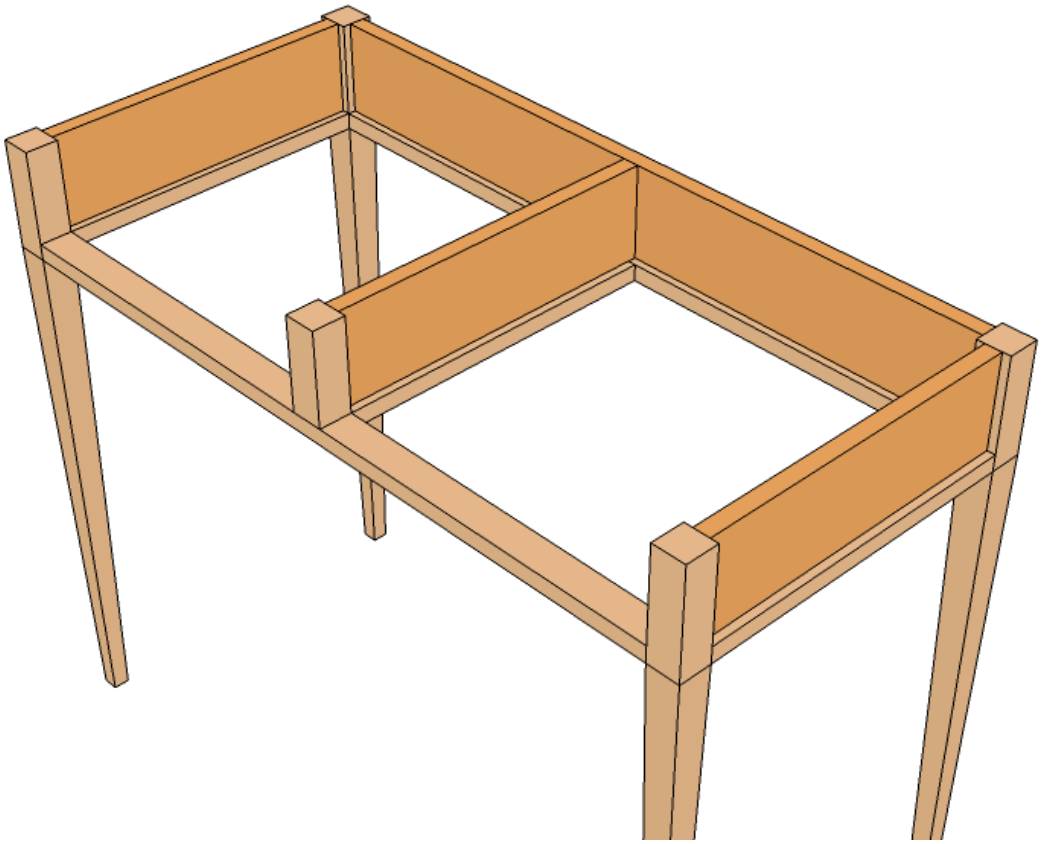

Writing Desk

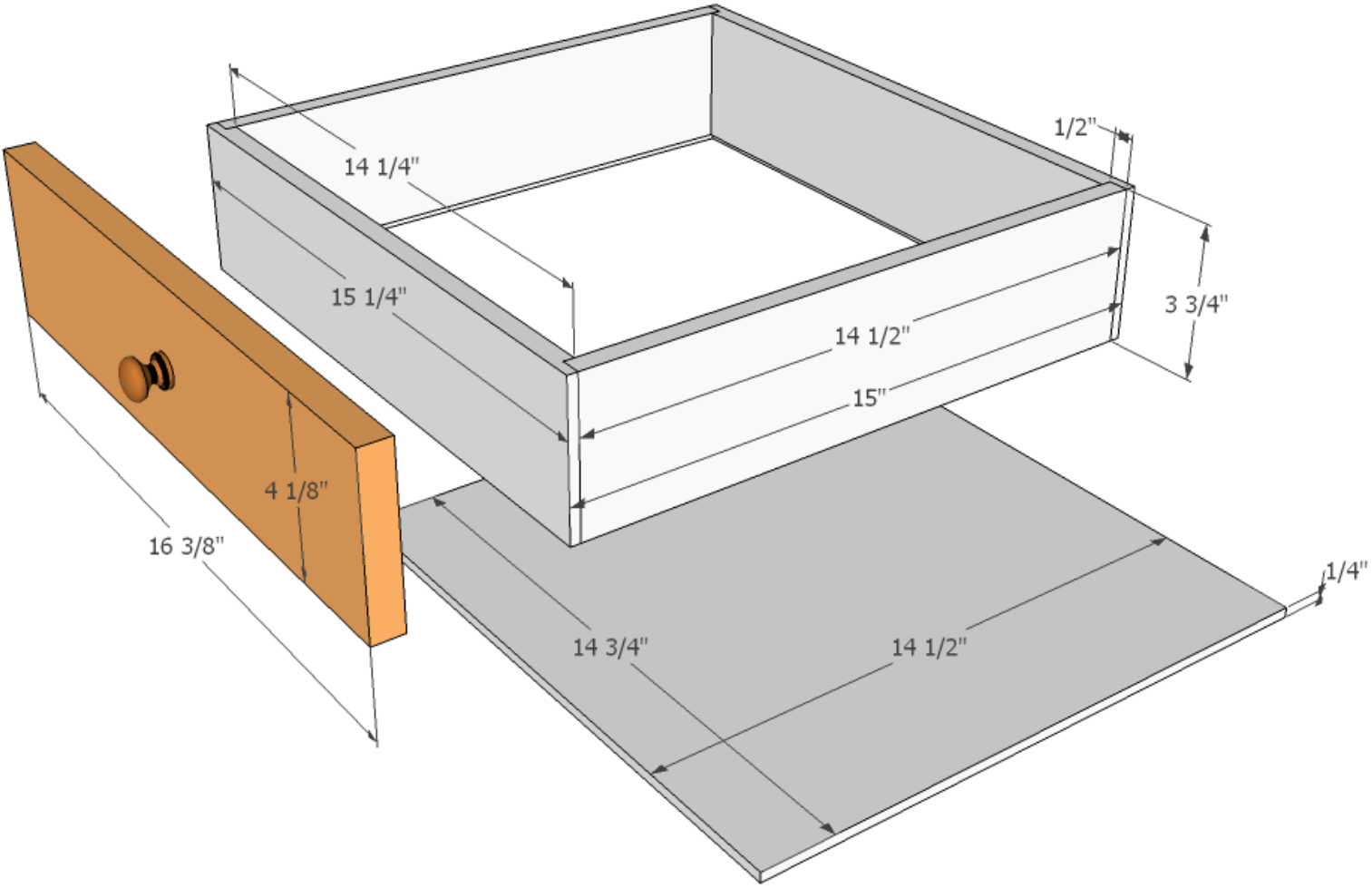
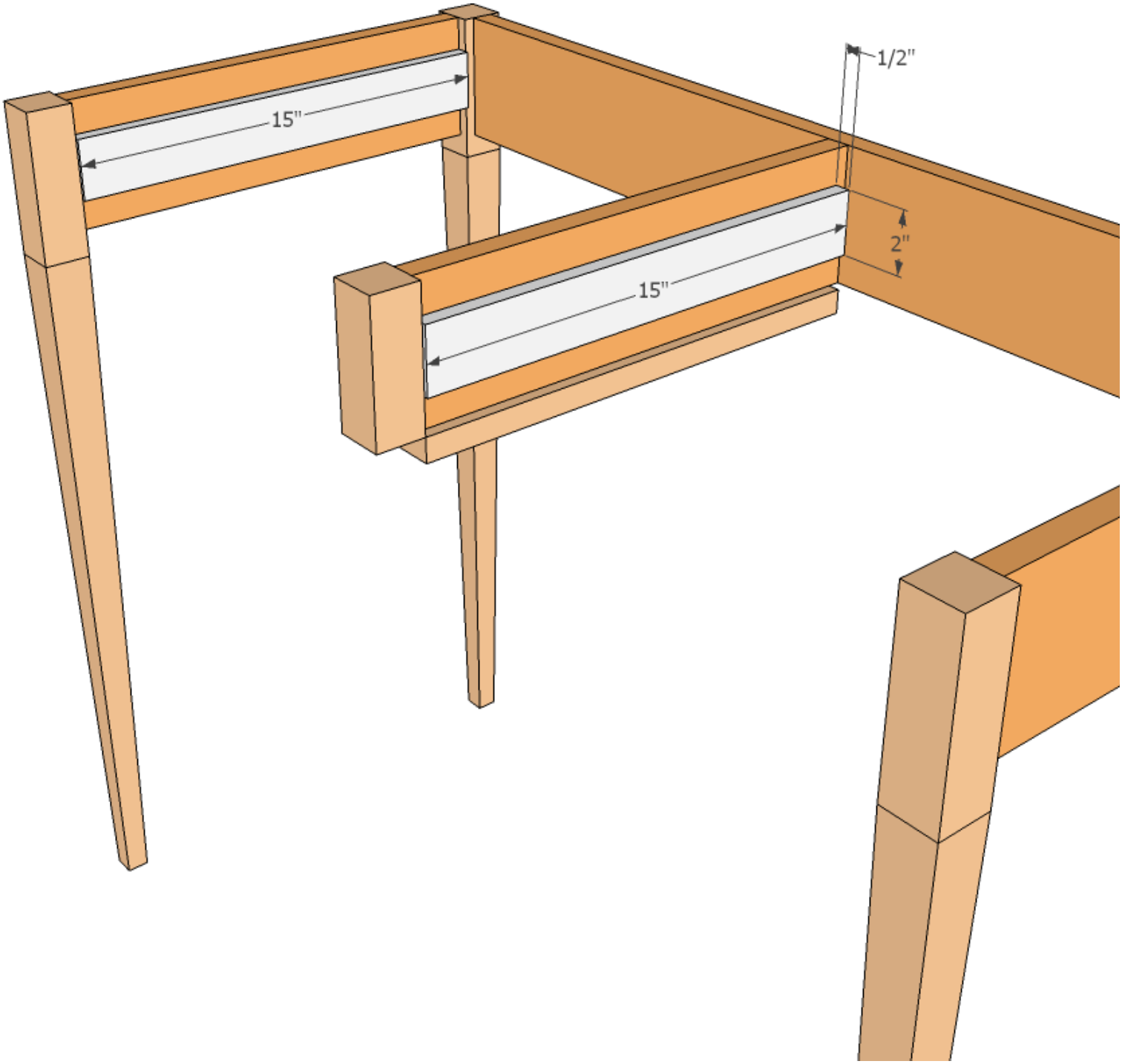
Writing Desk