Assembly Diagram

Kids' Room Adjustable Desk

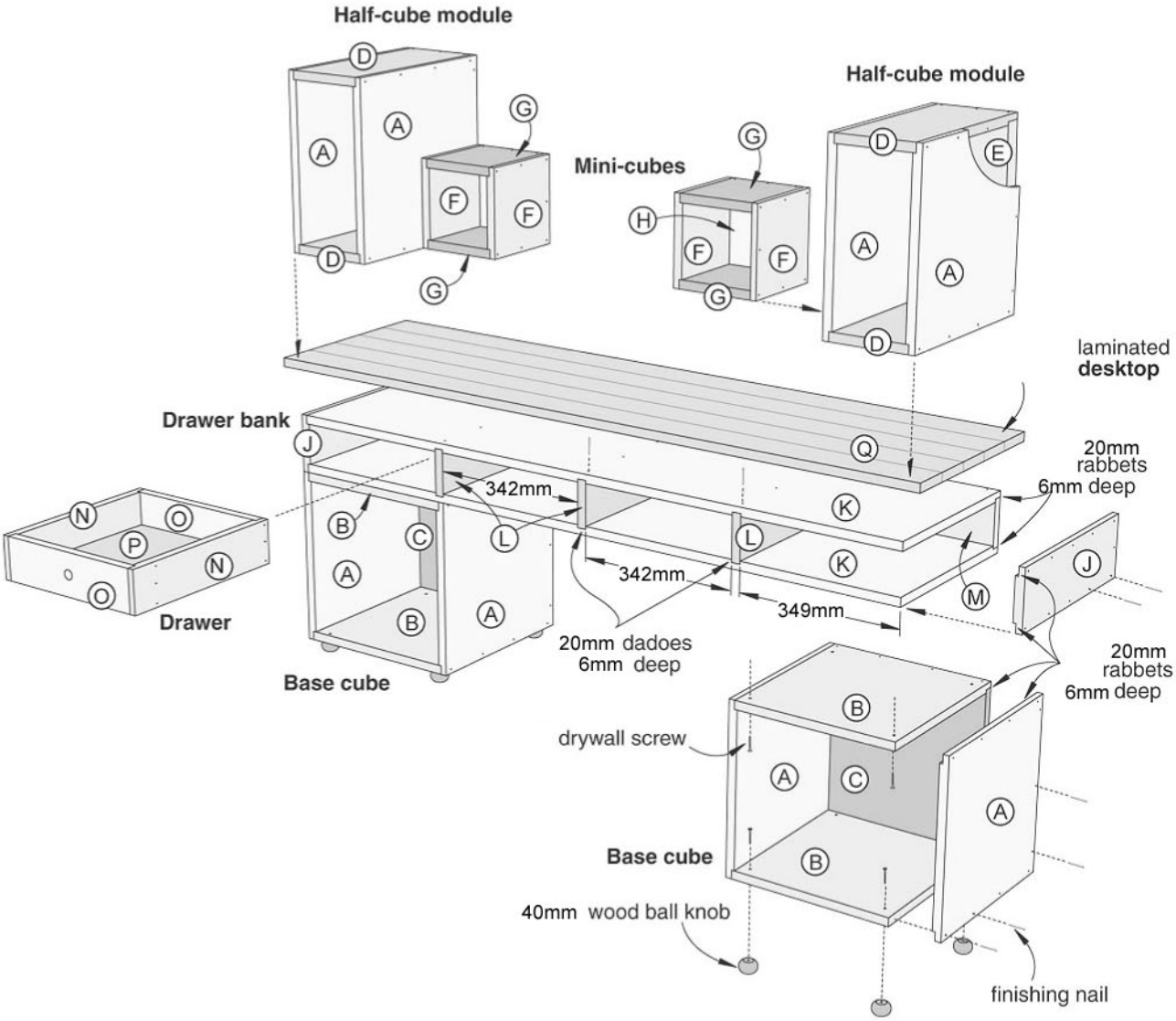

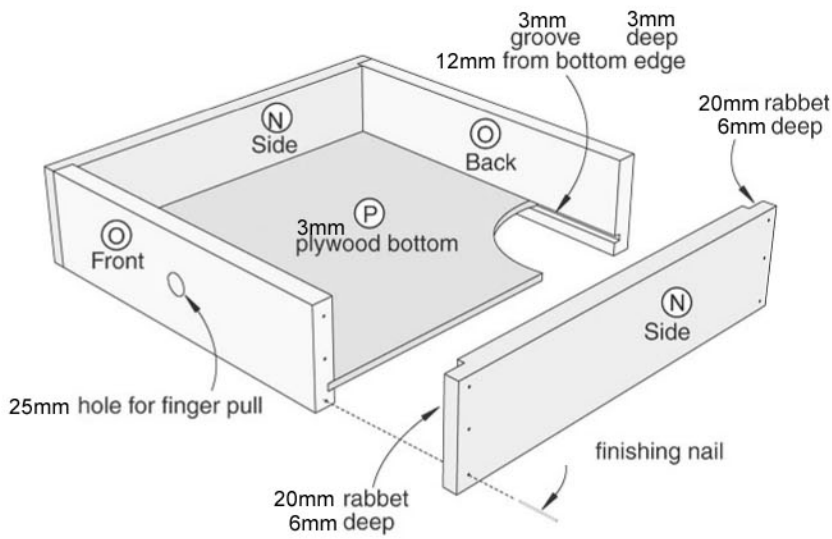

© Copyright 2006, Meredith Corporation. All Rights Reserved.