SEW A PRETTY POUF

Love these trendy pouf ottomans? Make your own with our step-by-step how-to.

WHAT YOU NEED:

- Printouts of the included pattern
- Scissors
- Tape
- 2 yards of 54-inch-wide linen burlap
- 1 old light solid-color bed sheet, any size (or 3 yards of 45-inch muslin)
- Straight pins
- Sewing machine
- 1 spool (125 yards) heavy-duty/upholstery thread to match burlap
- 2 large garbage bags full of fabric items for stuffing (old clothing, worn towels, fabric scraps)
- 1-5# box of fiberfill
- 1 roll fusible-web tape
- Large embroidery or straight upholstery needle
- 4 skiens embroidery floss to match or contrast fabric

1. PREPARE THE PATTERN

Print out the patterns. The number of copies of each shape needed is indicated on each page. Cut out the shapes. Using tape, piece together the larger pattern, following the instructions. When pieced together, the pattern will look like a rectangle with a triangle on each end (pictured at right). Piece and tape together the endcap pattern.

2. CUT THE PIECES

Layer the burlap over the bed sheet. Pin the pattern into place and cut out; repeat until you have eight sets (pictured at right.) You will have eight pieces of burlap and eight pieces of bed sheet. Using the endcap pattern, cut the octagon pieces for the top and bottom of the pouf. For each piece, fold a piece of burlap in half, pin the long edge of the endcap pattern along the fold, and cut out. Repeat to make the second octagon piece.

3. PIN THE PIECES

Sew your pouf starting with the large long shapes. Layer one bed-sheet piece on the bottom, two pieces of burlap in the middle, and one piece of sheet on top. Pin the layers together along one side. Repeat to create three more layered sets.

CONTINUED ON NEXT PAGE

BUDGET TIP

Fiberfill can be pricey, so we supplemented it with low- or no-cost fabric scraps. The sturdier fabric scraps give the pouf stability, and the fiberfill gives it a smooth finish.

bhg.com/pouf © Copyright 2011, Meredith Corporation. All Rights Reserved.

SEW A PRETTY POUF

4. STITCH THE SETS

Using a straight stitch and a ½-inch seam allowance, sew along the pinned side of a layered set, removing pins as you sew, to create pairs of panels. Repeat with the other pinned sets.

5. PRESS THE SEAMS

Open each sewn set in the middle. Press the seam allowance of each pair open so a strip of burlap lies flat on either side.

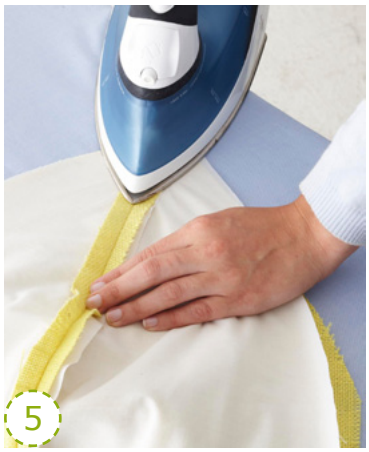

6. JOIN THE PAIRS

Lay one joined pair on top of another with right sides together (burlap to burlap) and pin. Sew along the pinned edge, unpin, and press open. Repeat with the other two layered sets.

At this point, you will have two pouf halves. Turn one half right side out and the other half inside out.

7. PUT THE HALVES TOGETHER

Nest one half inside the other with right sides together, and pin around the outside edges. Make a mark 5 inches on each side of the center point where all the seams meet on one end of the pouf.

8. SEW THE POUF

From one 5-inch mark, stitch around the outside edge of the pouf, stopping at the 5-inch mark on the other side, leaving a 10-inch opening. Reinforce the opening by sewing across the seam allowance at a right angle to the seam at the 5-inch marks.

9. STUFF THE POUF

Turn the pouf right side out with the opening at the top. Sort fabric scraps into heavy, light, and small piles. Start stuffing the pouf with the largest/heaviest pieces of fabric at the bottom center of the pouf. Heavy fabrics, such as denim, should be stuffed in as neatly as possible to avoid creating large gaps in the stuffing.

Once the pouf is filled about halfway, use softer and smaller pieces to stuff along the sides. A wooden spoon may be helpful to stuff pieces in place.

Continue filling with heaviest fabrics in the center and lighter/smaller pieces around the edges. The bottom of the pouf and the center should be stuffed with the heaviest fabrics to ensure good support. The lighter fabrics should go on the outside to give a smooth finish to the poof.

10. ADD THE FIBERFILL

When the pouf is about two-thirds stuffed, use fiberfill along the sides to fill in bumps and to smooth the shape. The top of the pouf should have a good layer of fiberfill so the seat is comfortable. The tighter the pouf is stuffed, the better it will hold its shape.

CONTINUED ON NEXT PAGE

bhg.com/pouf © Copyright 2011, Meredith Corporation. All Rights Reserved.

SEW A PRETTY POUF

11. CLOSE THE OPENING

Once you are satisfied with the amount of stuffing, use upholstery thread and a needle to hand-sew the seam together. The octagon piece will cover this part of the seam, so don't worry about neatness.

12. PREPARE TOP & BOTTOM PIECES

Using fusible-web tape to secure the fold and following manufacturer's instructions, press in the edges 1/2 inch on all sides of the two octagon burlap pieces.

13. BASTE TOP & BOTTOM PIECES

Line up the eight corners of the octagon piece with the eight seams on the top of the pouf as closely as possible. Insert pins straight down at the seams to make adjusting the alignment of the octagon easier.

Using a basting stitch 1-inch inside the edges of the octagon, baste one octagon piece to the top of the pouf.

Repeat on the bottom of the pouf with the other octagon piece.

14. PRACTICE THE DECORATIVE STITCH

Following our stitching diagram, sew the decorative finish along the seams of your pouf.

Although the stitch is simple, try practicing on a scrap of cloth to get comfortable with the rhythm of the stitch and perfect your technique.

NEXT PAGE: STEP-BY-STEP STITCHING

STITCHING DIAGRAM

Figure A

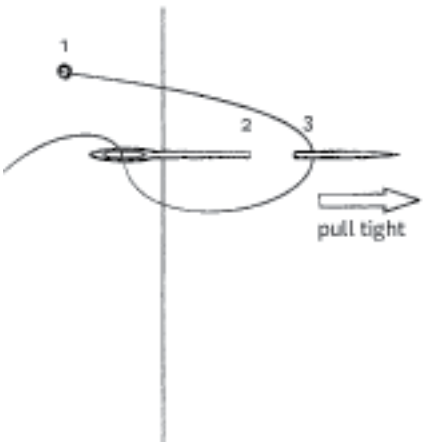

Figure B

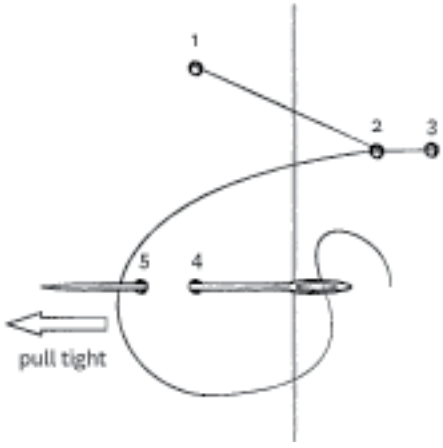

FIGURE A: Bring the needle up at 1, down at 2, and up at 3, making sure to position the thread under the needle as illustrated. Pull through and taut. Bring the thread across the seam at a 45 degree angle.

FIGURE B: Bring the needle down at 4 and up at 5, positioning the thread under the needle as illustrated. Pull through and taut. Repeat.

bhg.com/pouf © Copyright 2011, Meredith Corporation. All Rights Reserved.

SEW A PRETTY POUF DECORATIVE STITCH HOW-TO

Use this decorative stitch to finish your pouf. Sew the stitch around all of the side seams, as well as around the top and bottom pieces.

STEP 1: Use the decorative stitch along all seams of the pouf, starting at the octagon. Separate six-ply embroidery floss into two-ply pieces and work with 18 inches of floss or less at one time. At the top of one seam, push up through the fabric at the edge of the octagon shape about ½ inch from the vertical seam.

Move your needle down ½ inch and over the other side of the seam. Push the needle into the fabric about 1/4-inch from the seam and up another 1/4 inch to the right. Wrap the thread under the needle.

STEP 2: Draw the thread over the loop made with the last stitch.

STEP 3: Gently pull the thread taut to the right of the stitch.

STEP 4: Gently pull the thread taut at an angle across to the left side of the seam. Start your next stitch on the left, ½ inch lower than the stitch on the right and about 1 inch below the stitch directly above it on the same side.

STEP 5: Push the needle down through the fabric on the left side ¼ inch from the seam and up ½ inch from the seam with the thread under the needle.

Draw the thread over the loop and gently pull it taut to the left. Cross over to the right side again and continue down the seam. Repeat the stitching on each seam.

Once all the sides are stitched, use the same decorative stitch around the edge of the top and bottom octagons.

STEP 6: When all sides of each octagon are complete, remove the basting stitches from top and bottom pieces to finish.

Place your new pouf next to a chair in your living room to add a bit of color or to stand in as an ottoman.

If you're ambitious, make several poufs for when you need extra seating.

MORE FOR YOU

Want more decorating inspiration? Go to **BHG.com/budgetupdates** for 29 designer tips and ideas for adding smart and fabulous style to your home on a dime.

bhg.com/pouf © Copyright 2011, Meredith Corporation. All Rights Reserved.

SEW A PRETTY POUF PATTERN

Print two copies

Rectangular middle for making the side pieces of the pouf

Join triangular piece along this edge

Join rectangular piece along this edge

bhg.com/pouf © Copyright 2011, Meredith Corporation. All Rights Reserved.

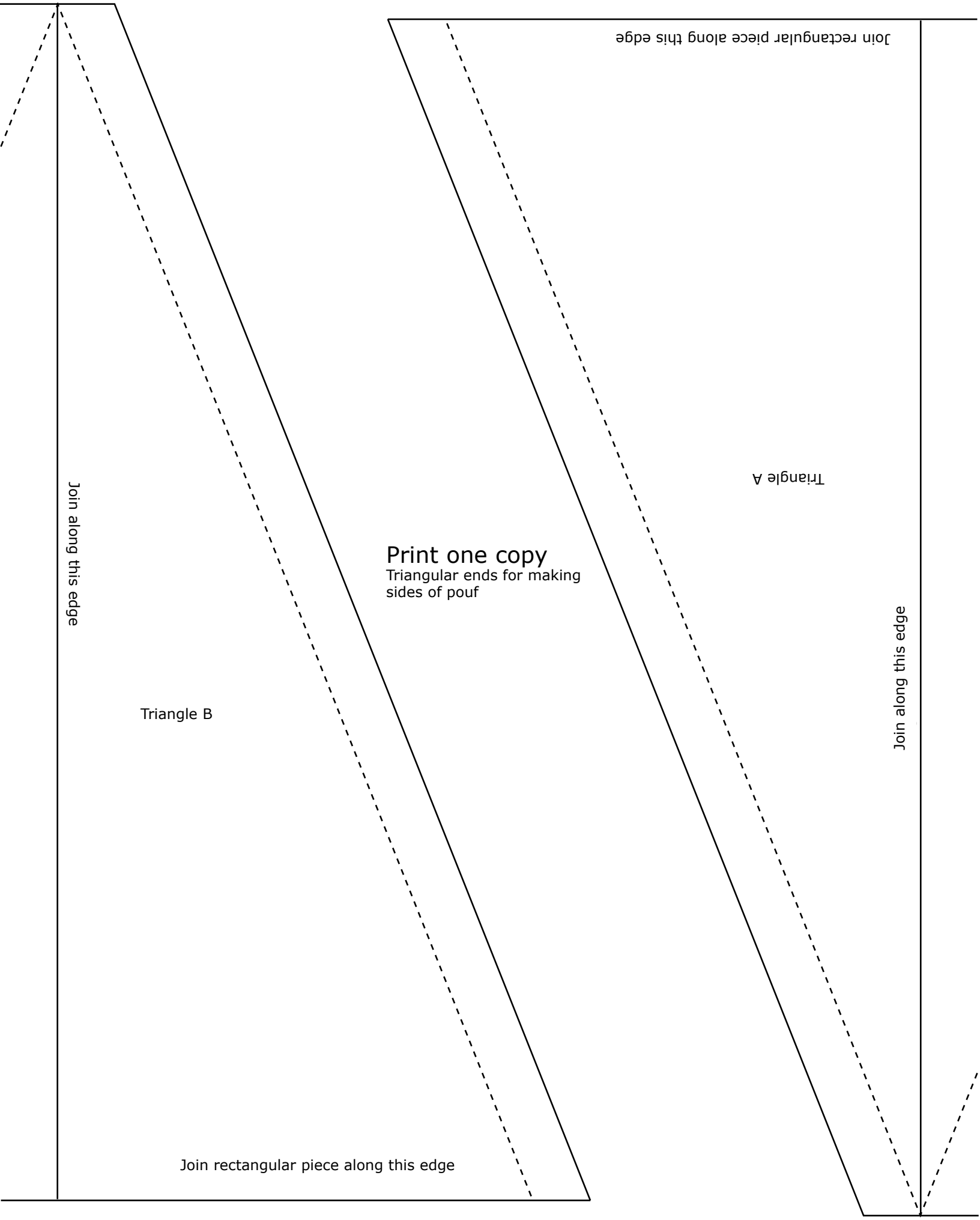

bhg.com/pouf © Copyright 2011, Meredith Corporation. All Rights Reserved.

Join rectangular piece along this edge

Join along this edge

Triangle B

Print one copy

Triangular ends for making sides of pouf

Triangle A

Join along this edge

Join rectangular piece along this edge

bhg.com/pouf © Copyright 2011, Meredith Corporation. All Rights Reserved.

Join along this edge

Print one copy

Pattern for making endcap pieces. Press under at dotted lines.

Join along this edge

Join along this edge

Join along this edge

bhg.com/pouf © Copyright 2011, Meredith Corporation. All Rights Reserved.